FBD International, LLC
Empire Center, No. 208A
68 Mody Road, Tsim Sha Tsui
Hong Kong
Office: 852-2369-3998
Fax: 852-2369-3983

FBD Partnership, LP
• P.O. BOX 18597 • SAN ANTONIO, TX 78218 USA •
• 210-637-2800 • FAX 210-637-2844 • www.fbdfrozen.com •
• FBD TECHNICAL SUPPORT • 1-866-323-2777 •
• TECHNICAL SUPPORT FAX 1-210-637-2832 •

PARTS CATALOG ADDENDUM

MODEL FBD56X SERIES

FROZEN BEVERAGE DISPENSERS

UNIQUE PARTS FOR FBD UNITS IN AUSTRALIA

HOW TO PURCHASE PARTS IF NECESSARY

Purchase orders may be faxed direct to **852-2369-3983**, or e-mailed to extremefrozen@fbdfrozen.com

Monday - Friday

7:00 a.m. - 5:30 p.m. Central Time

Ph 852-2369-3998

FAX 852-2369-3983

NOTICE:

The information contained in this document is subject to change without notice. Updates can be viewed on the FBD website (www.fbdfrozen.com).

FBD MAKES NO WARRANTY OF ANY KIND WITH REGARD TO THIS MATERIAL, INCLUDING, BUT NOT LIMITED TO, THE IMPLIED WARRANTIES OF MERCHANTABILITY AND FITNESS FOR A PARTICULAR PURPOSE. FBD shall not be liable for errors contained herein or for incidental consequential damages in connection with the furnishings, performance, or use of this material.

This document contains proprietary information which is protected by copyright. All rights reserved.

©2011 FBD Partnership, LP. All Rights Reserved.

This manual is an Initial Issue and is an Addendum to FBD Manual 24-2280-0002.

Please refer to the FBD web site (www.fbdfrozen.com) for information relating to FBD Installation, Operation and Service Manuals, Instruction Sheets, Technical Bulletins, Service Bulletins, etc.

REV A: 08/30/2011
FBD Part Number: 24-2280-0011

TABLE OF CONTENTS

HOW TO PURCHASE PARTS IF NECESSARY..... 1

TABLE OF CONTENTS..... **2**

ILLUSTRATIONS, PARTS LISTINGS..... **3**

12-2722-0026, Power Cable..... 3

14-0378-0001, Buck and Boost Transformer..... 3

14-2022-0003, Toroidal Transformer..... 3

14-2224-0001, EMI Filter..... 3

14-0108-0006, Clipsal Plug, 56P320..... 3

22-2406-0002, 1/4” Exhaust Bulkhead Fitting..... 4

22-2516-0001, 1/8” NPT X Dole Fitting..... 4

22-2516-0002, 1/8” NPT Fitting..... 4

22-0277-0001, 1/4” NPT X 1/4” Barb, Male SS Nipple..... 4

22-2121-0001, 1/4” Barbed Cross..... 4

22-2212-0005, 3/8” Barbed Elbow..... 4

17-2791-0001, Active Charge Regulator Cap..... 5

22-2274-0001, B-44-3 Tubing, 0.250 ID..... 5

52-2066-0001, Parker Relief Valve..... 5

40-0301-0001, Rear Seal..... 5

52-0103-0001, SS Dispensing Valve..... 5

17-2595-0017, Front Cover, Side Open, 2 Barrel..... 6

17-2595-0016, Front Cover, Side Open, 3 Barrel..... 6

19-2006-0020, Deep Drip Tray, 2 Barrel..... 6

19-2006-0030, Deep Drip Tray, 3 Barrel..... 6

17-0252-0022, Deep Drip Tray Support, 2 Barrel..... 6

17-2634-0030, Deep Drip Tray Support, 3 Barrel..... 6

17-0221-0024, Deep Splash Plate, 2 Barrel..... 6

17-0221-0033, Deep Splash Plate, 3 Barrel..... 6

17-2706-0005, Lower Pivot Bracket, Side Open Door, 2 Barrel..... 7

17-2706-0009, Lower Pivot Bracket, Side Open Door, 3 Barrel..... 7

17-2706-0007, Upper Pivot Bracket, Side Open Door, 2 Barrel..... 7

17-2706-0010, Upper Pivot Bracket, Side Open Door, 3 Barrel..... 7

12-2780-015L, LED Side Open Door Assembly, 2 Barrel..... 7

12-2780-013L, LED Side Open Door Assembly, 3 Barrel..... 7

12-2722-0026 - POWER CABLE

14-0378-0001 - BUCK & BOOST TRANSFORMER

14-2022-0003 - TOROIDAL TRANSFORMER

14-2224-0001 - EMI FILTER

14-0108-0006 - CLIPSAL PLUG, 56P320

22-2406-0002 - 1/4” CO2 EXHAUST BULKHEAD FITTING

22-2516-0001 - 1/8” NPT X DOLE FITTING

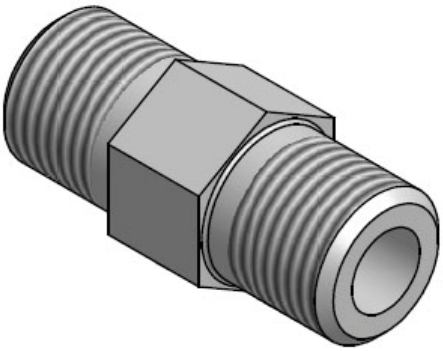

22-2516-0002 - 1/8” NPT FITTING

22-0277-0001 - 1/4” NPT X 1/4” BARB, MALE SS NIPPLE

22-2121-0001 - 1/4” BARBED CROSS

22-2212-0005 - 3/8” BARBED ELBOW

17-2791-0001 - ACTIVE CHARGE REGULATOR CAP

22-2274-0001 - B-44-3 TUBING, 0.250 ID

52-2066-0001 - PARKER RELIEF VALVE

40-0301-0001 - REAR SEAL

52-0103-0001 - SS DISPENSING VALVE

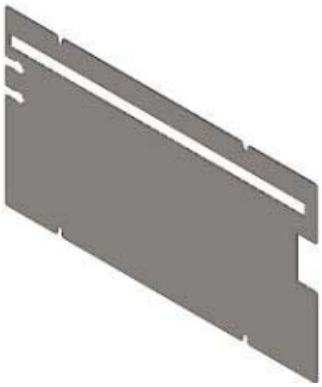

17-2595-0017 - FRONT COVER, SIDE OPEN, 2 BARREL

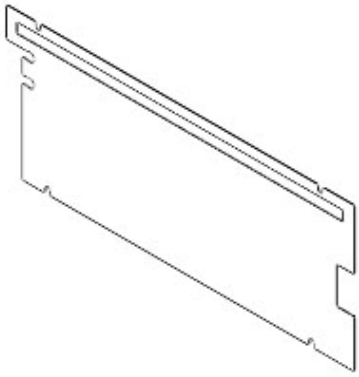

17-2595-0016 - FRONT COVER, SIDE OPEN, 3 BARREL

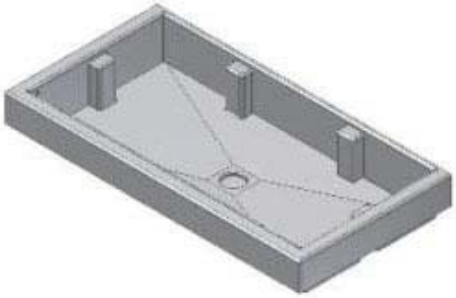

19-2006-0020 - DEEP DRIP TRAY, 2 BARREL

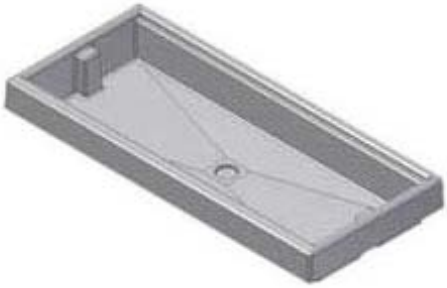

19-2006-0030 - DEEP DRIP TRAY, 3 BARREL

17-0252-0022 - DEEP DRIP TRAY SUPPORT, 2 BARREL

17-2634-0030 - DEEP DRIP TRAY SUPPORT, 3 BARREL

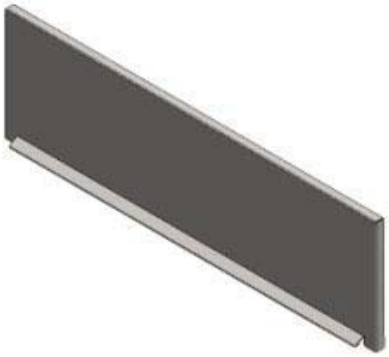

17-0221-0024 - DEEP SPLASH PLATE, 2 BARREL

17-0221-0033 - DEEP SPLASH PLATE, 3 BARREL

**17-2706-0005 - LOWER PIVOT BRACKET,
SIDE OPEN DOOR,
2 BARREL**

**17-2706-0009 - LOWER PIVOT BRACKET,
SIDE OPEN DOOR,
3 BARREL**

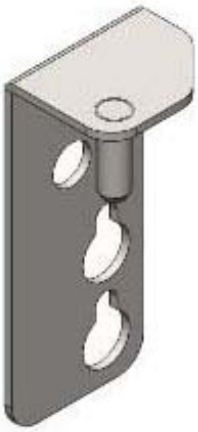

**17-2706-0007 - UPPER PIVOT BRACKET,
SIDE OPEN DOOR,
2 BARREL**

**17-2605-0010 - UPPER PIVOT BRACKET,
SIDE OPEN DOOR,
3 BARREL**

**12-2780-015L - LED SIDE OPEN DOOR
ASSEMBLY,
2 BARREL**

**12-2780-013L - LED SIDE OPEN DOOR
ASSEMBLY,
3 BARREL**