WHALE TAIL

WHALE TAIL FOUNT
AT A GLANCE

This fount is unique in so many areas, different angles, offset faucets, different heights and different lengths, this tower has it all. Available in 6 to 10 faucet versions, this tower, similar in appearance in so many ways to a whale's tail, is certain to make a splash in your bar.

SPECIFICATIONS

- **FINISH**: High polish
- **MATERIAL**: Stainless steel 304 grade
- **TOP THREAD**: 3/4" BSP connection
- **MOUNTING**: Ladder lock

OPTIONS

- Decal discs
- Taps & Adaptors
- Custom made dimensions on request

COLOURS

- Various plating colours

TECHNICAL DRAWING

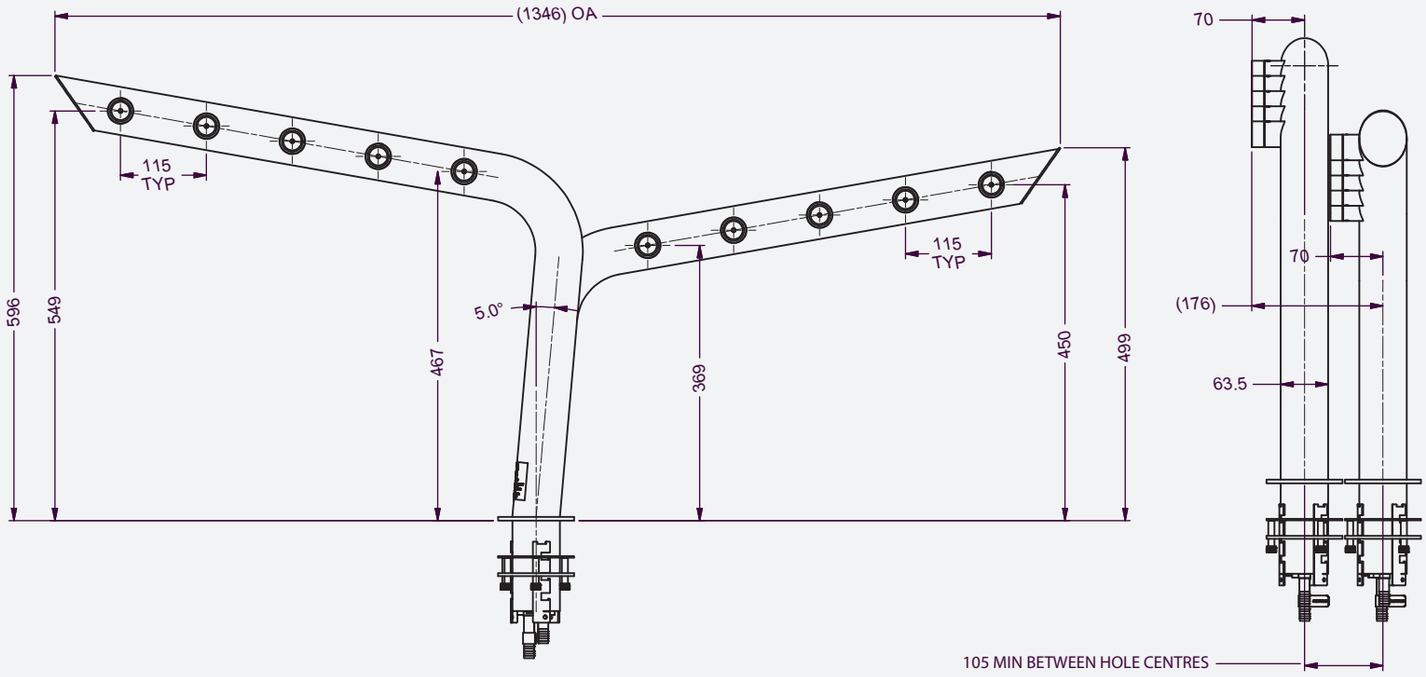

Part No.: 34000655