The Turbo Carbonator is designed using the highest quality materials and proven technology.

- Superior quality and reliability
- Built-in, advanced diagnostics system
- Anderson Brass vented check valve
- Heavy duty, high capacity tank
- Solid state electronics
- High capacity for fast flow valves
- ASSE approved check valve
- Dispensing Solutions that Pour More

PRODUCT SPECIFICATIONS	
Dimensions	Height 317 mm, Width 311 mm, Depth 362 mm
ELECTRICAL	115V/60Hz
WEIGHT	15.87 kg
TANK OPERATING	6.4 L
FITTINGS	CO_2 Inlet: 1/4” male flare, Water Inlet: 3/8” male flare, Soda Outlet: 2 X 3/8” male flare
PUMP	100 GPH (379 LPH)

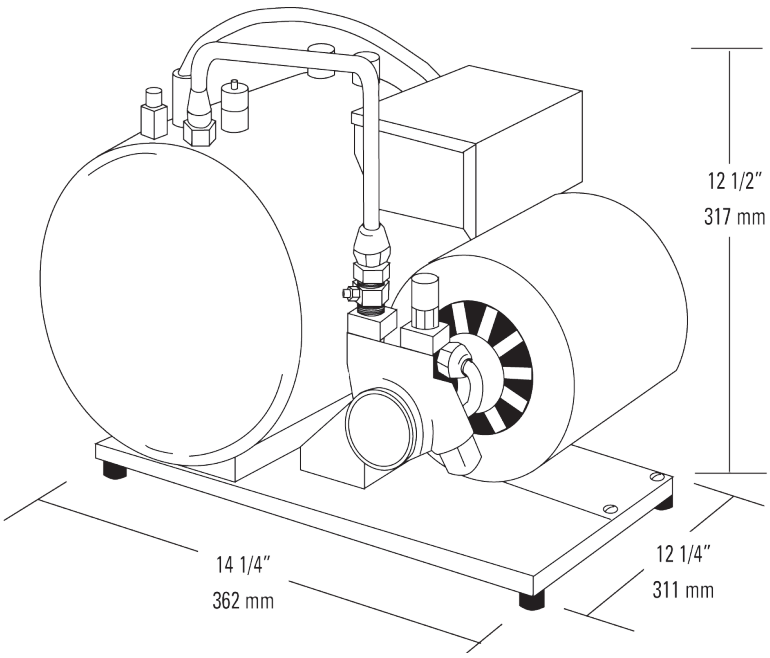

- 230V Turbo w/ brass pump
- 230V Turbo w/ brass pump & Insulated

(All models include built-in diagnostics and vented check valve.)

- WaterMark approved
- Electrical Safety Compliance
- Regulatory Compliance - AS/NZS 4417

Customer Service:
Should you require more information about our products, please do not hesitate to contact our customer service desk at custserv@lancercorp.com.

Warranty:
For warranty specifics by product, contact your Lancer Sales Representative.
Equipment design and/or specifications are subject to change without notice.

LANCER BEVERAGE SYSTEMS

Hoshizaki Lancer reserve the right to alter specifications without notice
Images are for illustration purposes only as product may vary.

2019 Lancer Soft Drinks. All rights reserved.4/10/2019